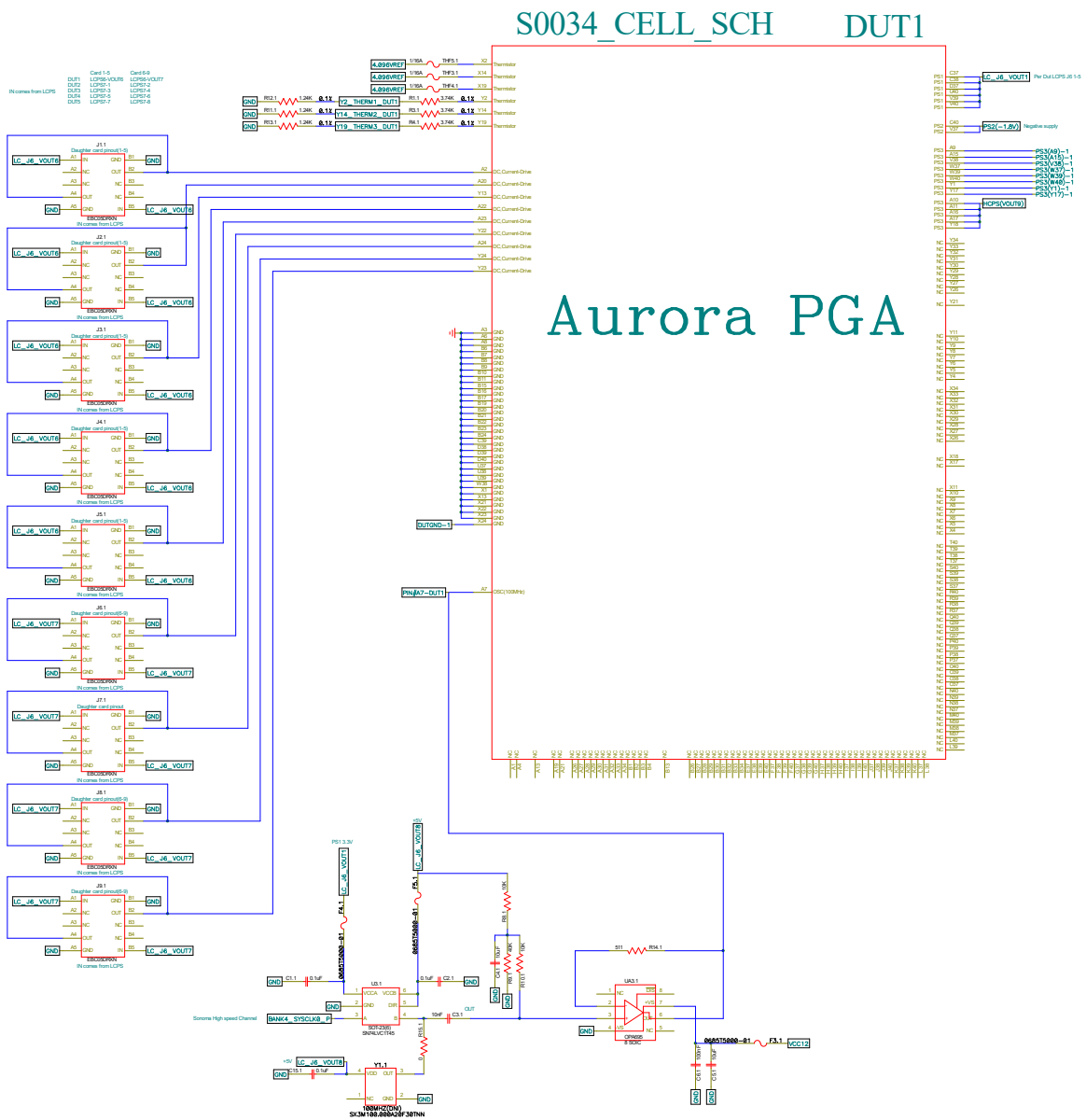

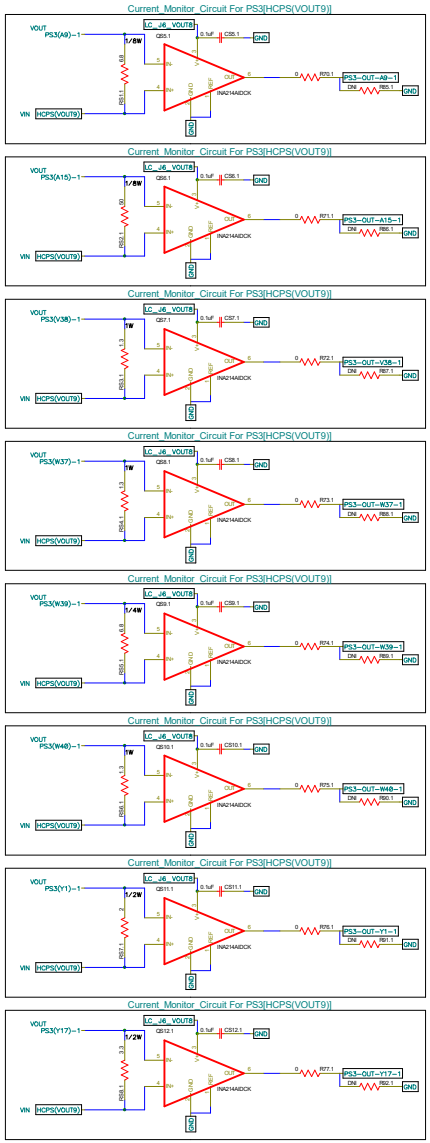

Title	Aurora PGA Sonoma Air full size BIM	
Size D	Number SCH#S0034	Rev A
Date 07/13/24	Drawn by	
Filename	Sheet 1 of 14	

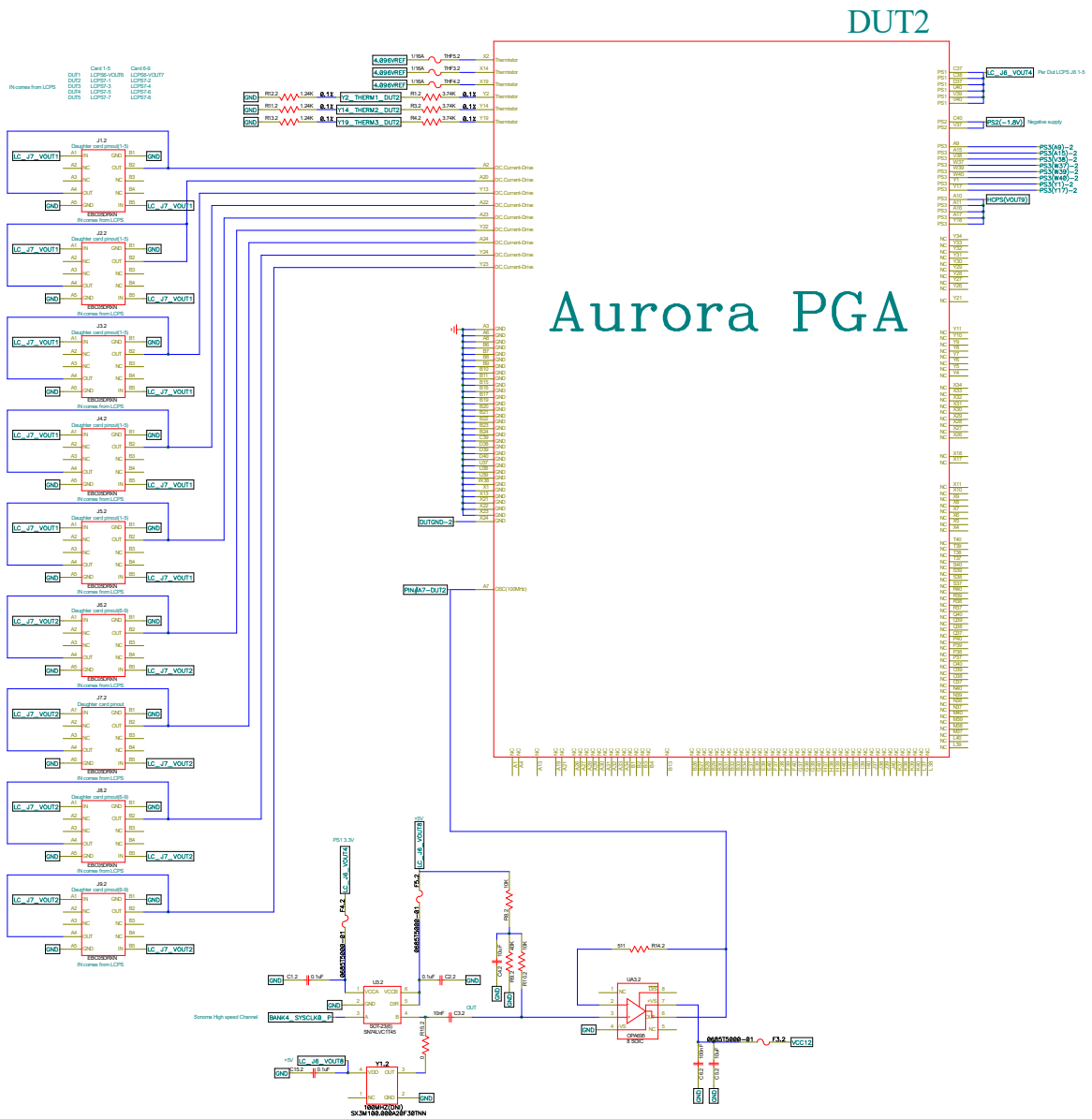
DUT2
Aurora PGA
IN comes from LCPS
Card 1-5
Card 6-9
J1.2
J2.2
J3.2
J4.2
J5.2
J6.2
J7.2
J8.2
J9.2
Daughter card pinout(1-5)
Daughter card pinout(6-9)
Daughter card pinout
ESCOSCPRN
LC_J7_VOUT1
LC_J7_VOUT2
LC_J6_VOUT8
LC_J6_VOUT4
LC_J6_VOUT9
Y2_THERM1_DUT2
Y14_THERM2_DUT2
Y19_THERM3_DUT2
4.096VREF1
4.096VREF2
4.096VREF3
THF5.2
THF3.2
THF4.2
R12.2
R11.2
R13.2
R1.2
R3.2
R4.2
1.24K
3.74K
0.1%
1/16A
X2
X14
X19
Y2
Y14
Y19
Thermistor
DC Current-Drive
OSC(100MHz)
DUTGND-2
PIN(IA7-DUT2)
LC_J6_VOUT4
Per Dut LCPS J6 1-5
PS2(-1.8V)
Negative supply
HCPS(VOUT9)
PS3(A9)-2
PS3(A15)-2
PS3(V38)-2
PS3(W37)-2
PS3(W39)-2
PS3(W48)-2
PS3(Y1)-2
PS3(Y17)-2
PS1 3.3V
F5.2
F4.2
F3.2
VCC12
0.1uF
C1.2
C2.2
C3.2
C4.2
C5.2
C6.2
C7.2
C8.2
C9.2
C10.2
C11.2
C12.2
C13.2
10nF
100nF
U5.2
VCCA
VCCB
GND
DIR
OUT
SCH-2580
SN74LVC1T45
Sonoma High speed Channel
BANK4_SYSCLK8_P
R15.2
0
Y1.2
VDD
OUT
100MHz(TCXO)
SX3M100.000A20F30TNN
R9.2
10K
R10.2
R8.2
CLK_8
R14.2
511
U4.2
CMP666
8 SOIC
+VS
-VS
IN+
IN-
OUT
REF
R6
R7
R5
R20.2
R21.2
R22.2
R23.2
R24.2
R25.2
R26.2
R27.2
R28.2
R29.2
R30.2
R31.2
R32.2
R33.2
R34.2
R35.2
R36.2
R37.2
R38.2
R39.2
R40.2
R41.2
R42.2
R43.2
R44.2
R45.2
R46.2
R47.2
R48.2
R49.2
R50.2
R51.2
R52.2
R53.2
R54.2
R55.2
R56.2
R57.2
R58.2
INA214AIDCK
Current_Monitor_Circuit For PS3[HCPS(VOUT9)]
VOUT
VIN
PS3(A9)-2
PS3(A15)-2
PS3(V38)-2
PS3(W37)-2
PS3(W39)-2
PS3(W48)-2
PS3(Y1)-2
PS3(Y17)-2
PS3-OUT-A9-2
PS3-OUT-A15-2
PS3-OUT-V38-2
PS3-OUT-W37-2
PS3-OUT-W39-2
PS3-OUT-W48-2
PS3-OUT-Y1-2
PS3-OUT-Y17-2
1/8W
1W
1/4W
1/2W
Title
Aurora PGA Sonoma Air full size BIM
Size
D
Number
SCH#S0034
Rev
A
Date
07/13/24
Drawn by
Filename
Sheet
2 of 14

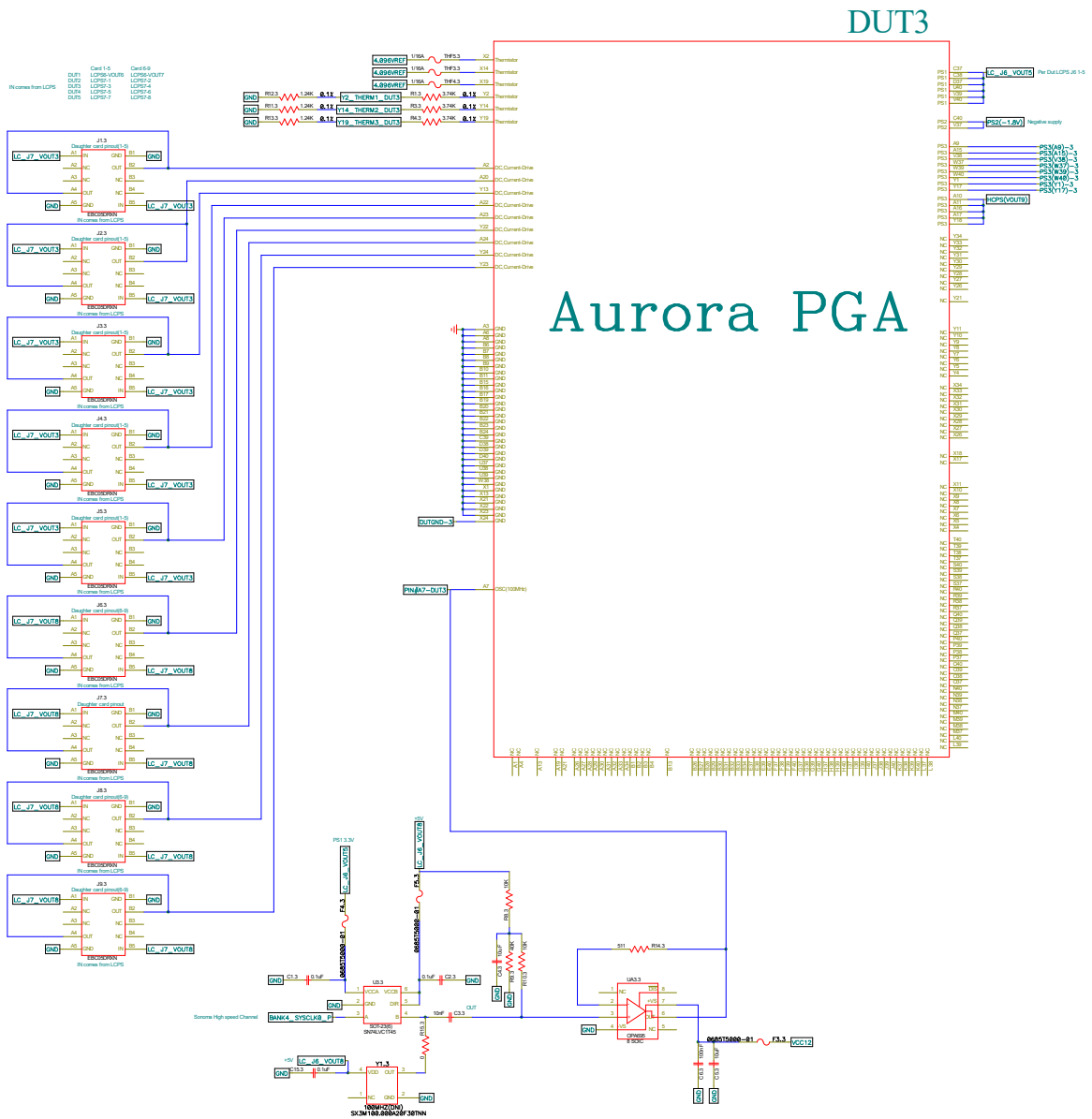

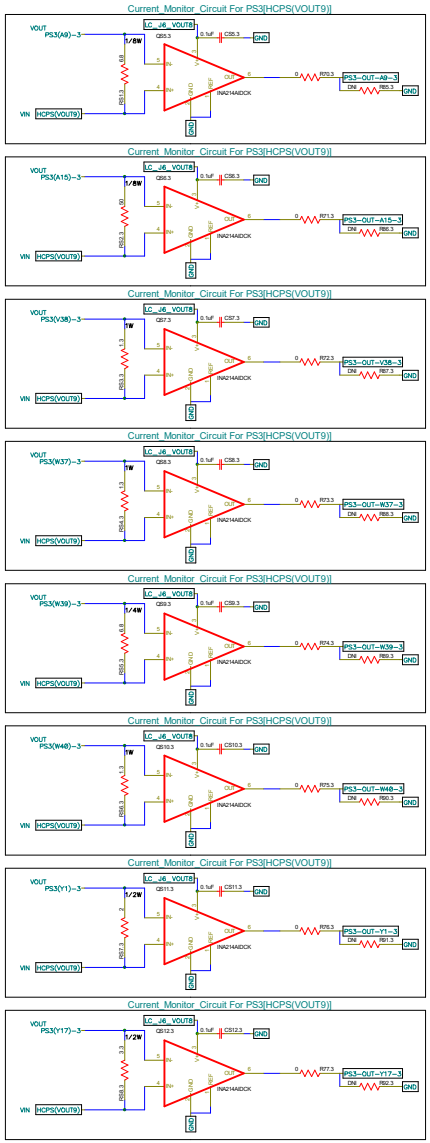

Title	Aurora PGA Sonoma Air full size BIM	
Size D	Number SCH#S0034	Rev A
Date 07/13/24	Drawn by	
Filename	Sheet 3 of 14	

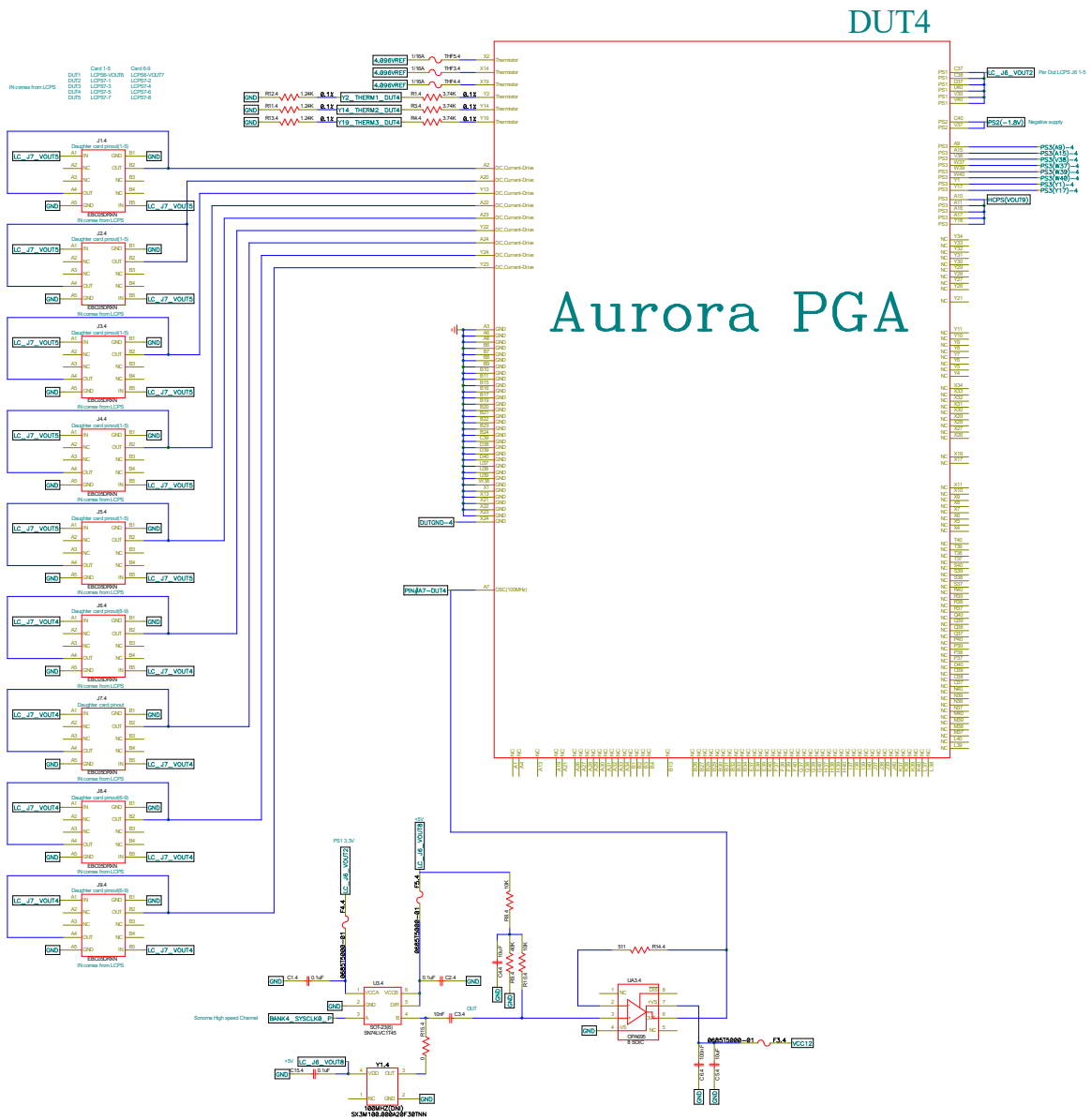

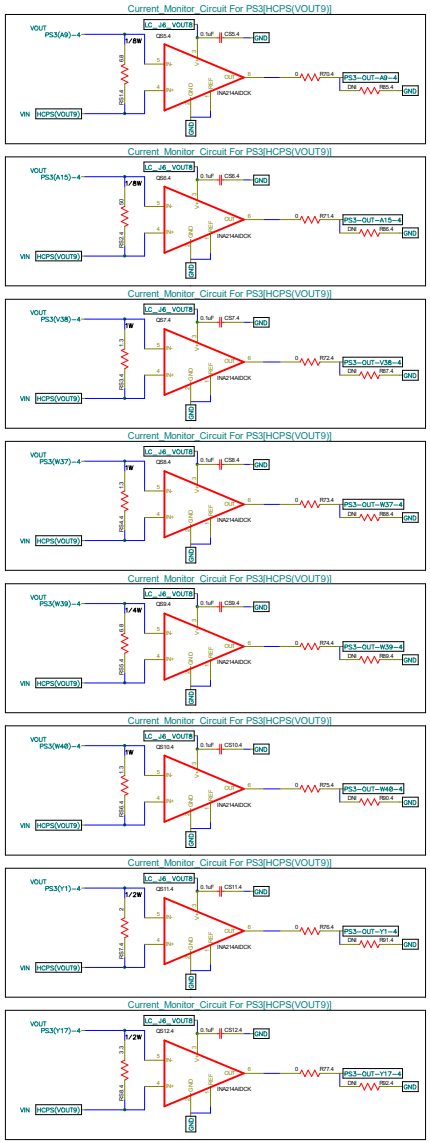

Title	Aurora PGA Sonoma Air full size BIM
Size	D
Number	SCH#S0034
Rev	A
Date	07/13/24
Drawn by	
Filename	
Sheet	4 of 14

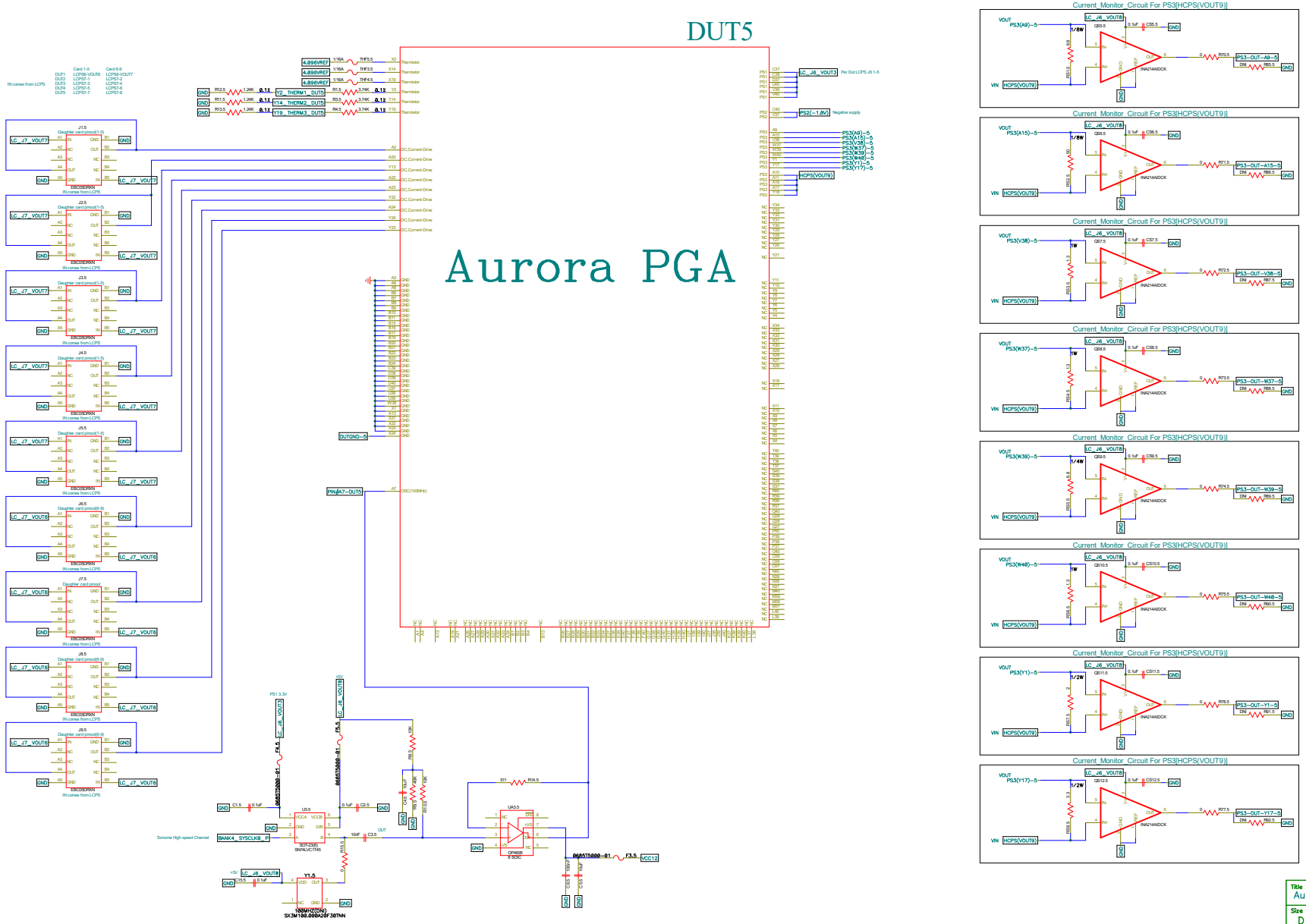

Title	Aurora PGA Sonoma Air full size BIM
Size	D
Number	SCH#S0034
Rev	A
Date	07/13/24
Drawn by	
Filename	
Sheet	5 of 14

DE-COUPLING CAPS

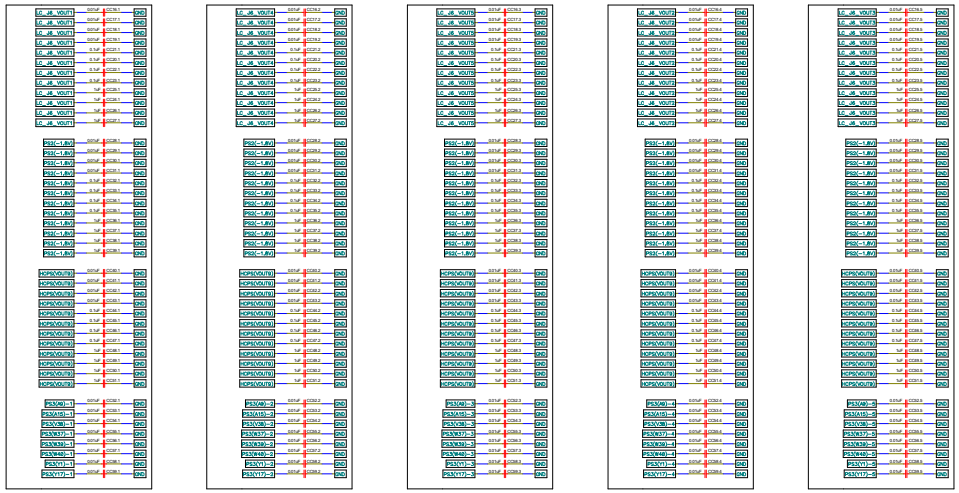

Title	Aurora PGA Sonoma Air full size BIM	
Size E	Number SCH#S0034	Rev A
Date 07/13/24	Drawn by	
Filename	Sheet 6 of 14	

TMUX1204DGS CIRCUIT FOR Thermistor Pins

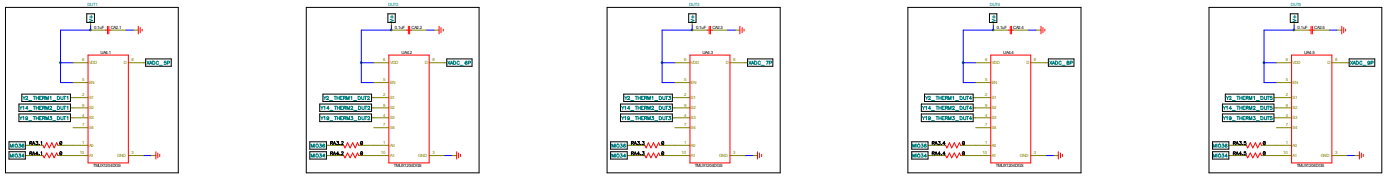

TMUX1204DGS CIRCUIT PER DUT FOR PS3 CURRENT SENSE

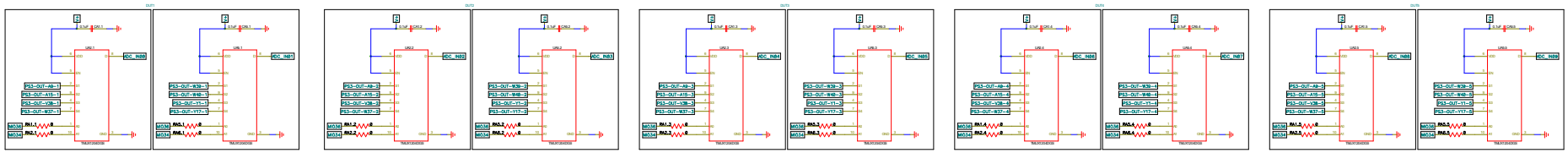

REGULATOR MODULE

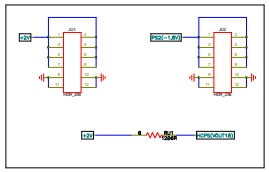

Title: Aurora PGA Sonoma Air full size BIM		
Size: E	Number: SCH#S0034	Rev: A
Date: 07/13/24	Drawn by	
Filename	Sheet 7 of 14	

For Older Legacy systems Do not install resistors RP4, RP16, RP24, RP3, RP15, RP19, RP20, RP26

LCPS J6

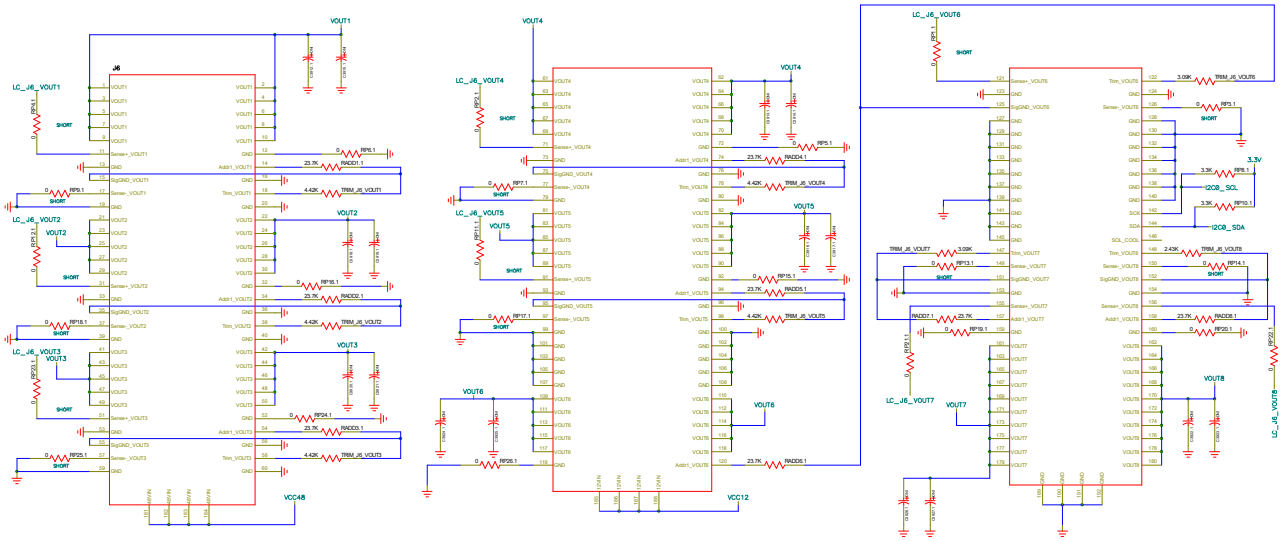

Trim_VOUT1 4.42K PS1 DUT1
Trim_VOUT2 4.42K PS1 DUT2
Trim_VOUT3 4.42K PS1 DUT3
Trim_VOUT4 4.42K PS1 DUT4
Trim_VOUT5 4.42K PS1 DUT5
Trim_VOUT6 3.09K Daughter card supply DUT1
Trim_VOUT7 3.09K Daughter card supply DUT2
Trim_VOUT8 2.43K +5V (Heaters switches supply)

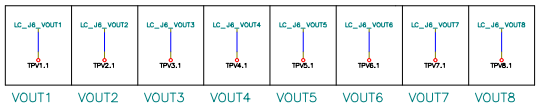

FUSES FOR LC POWERS(J6)

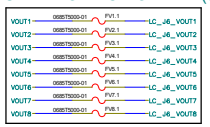

For ADDr1 resistor set Values based on LCPS or HCPS.
VOUT 1-8 23.7K
VOUT 9-16 36.5K
VOUT 17-24 54.9K
VOUT 25-32 84.5K
VOUT 33-40 130K
VOUT 41-48 200K
For Older Legacy systems Do not install these resistors.
For Trim Resistor Values use Formula Below
Reduce stress voltage by 30% for Vo in the formula below.
Rtrim = [12 / (Vo - 0.6)] kohm

Title	Aurora PGA Sonoma Air full size BIM
Size	D
Number	SCH#S0034
Rev	A
Date	07/13/24
Drawn by	
Filename	
Sheet	8 of 14

For Older Legacy systems Do not install resistors RP28, RP31, RP34, RP36, RP48, RP39, RP51, RP40

LCPS J7

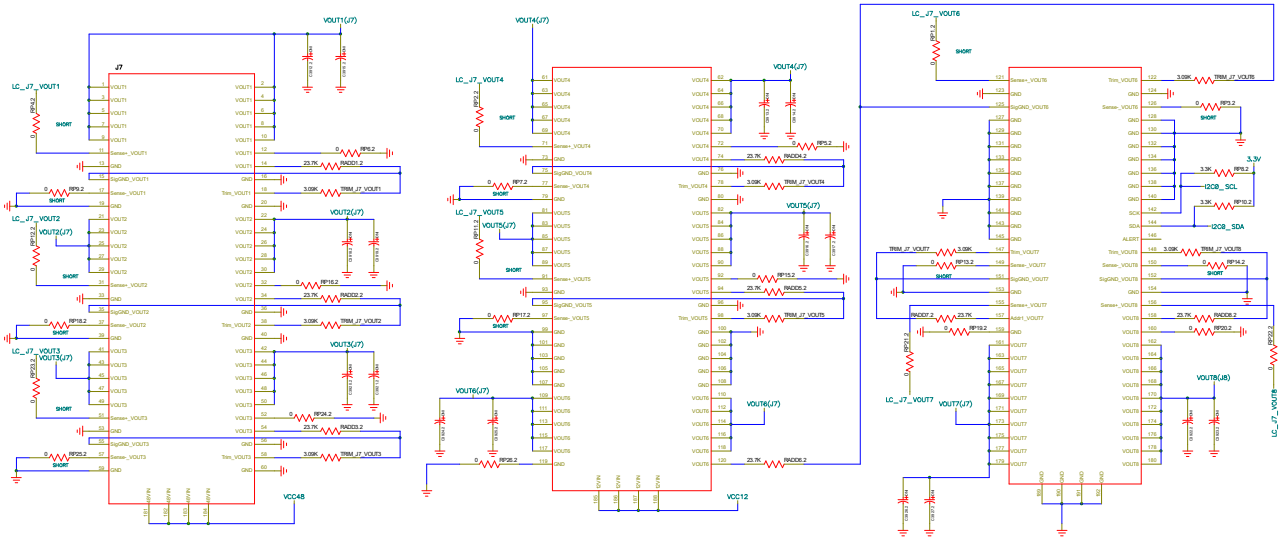

Trim_VOUT1 3.09K Daughter card supply DUT2
Trim_VOUT2 3.09K Daughter card supply DUT2
Trim_VOUT3 3.09K Daughter card supply DUT3
Trim_VOUT4 3.09K Daughter card supply DUT3
Trim_VOUT5 3.09K Daughter card supply DUT4
Trim_VOUT6 3.09K Daughter card supply DUT4
Trim_VOUT7 3.09K Daughter card supply DUT5
Trim_VOUT8 3.09K Daughter card supply DUT5

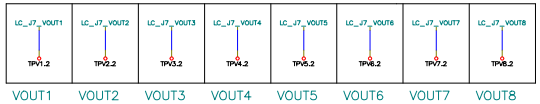

FUSES FOR LC POWERS(J7)

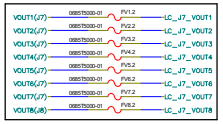

For ADDr1 resistor set Values based on LCPS or HCPS.
VOUT 1-8 23.7K
VOUT 9-16 36.5K
VOUT 17-24 54.9K
VOUT 25-32 84.5K
VOUT 33-40 130K
VOUT 41-48 200K

For Older Legacy systems Do not install these resistors.

For Trim Resistor Values use Formula Below
Reduce stress voltage by 30% for Vo in the formula below.
Rtrim = [12 / (Vo - 0.6)] kohm

Title	Aurora PGA Sonoma Air full size BIM
Size	D
Number	SCH#S0034
Rev	A
Date	07/13/24
Drawn by	
Filename	
Sheet	9 of 14

EEPROM_CIRCUIT

+3.3V POWER COMES FROM J3.151,153,155 connector

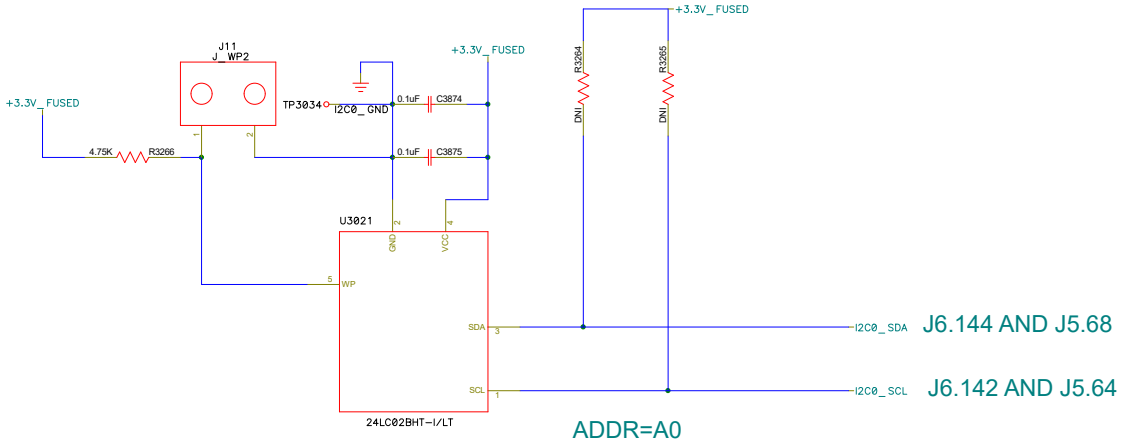

J6.144 AND J5.68

J6.142 AND J5.64

ADDR=A0

EEPROM 2Kb/256 bytes, I2, 400KHz SC-70-5

Title: Aurora PGA Sonoma Air full size BIM		
Size: C	Number: SCH#S0034	Rev: A
Date: 07/13/24	Drawn by	
Filename	Sheet 10 of 14	

LCSP_LED_POWER(J6)

VOUT1

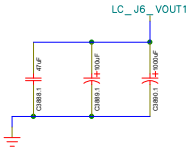

VOUT2

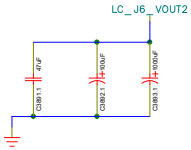

VOUT3

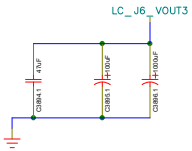

VOUT4

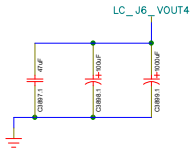

VOUT5

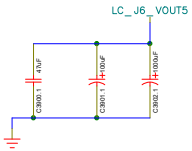

VOUT6

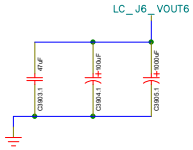

VOUT7

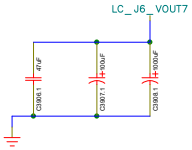

VOUT8

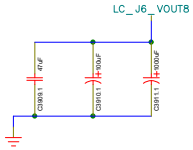

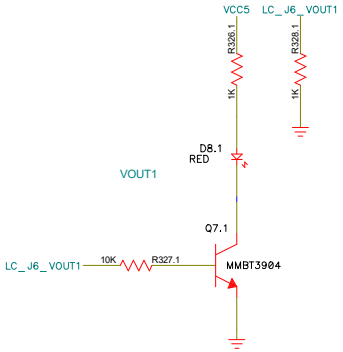

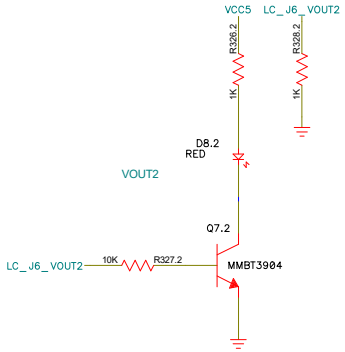

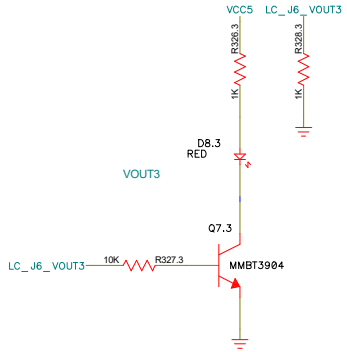

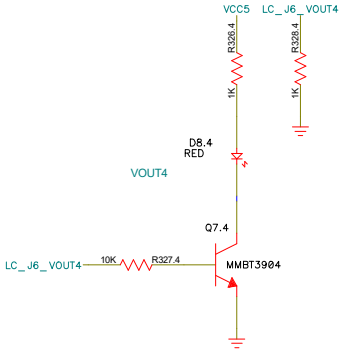

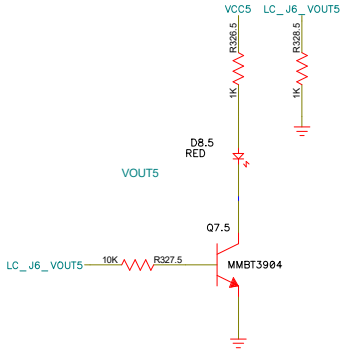

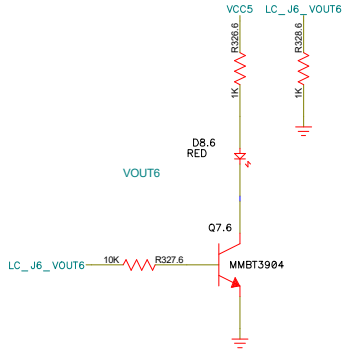

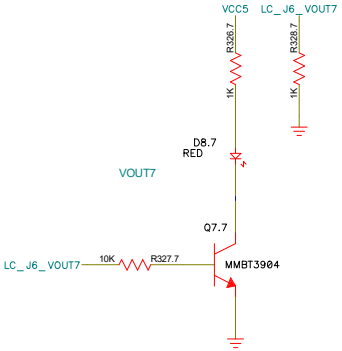

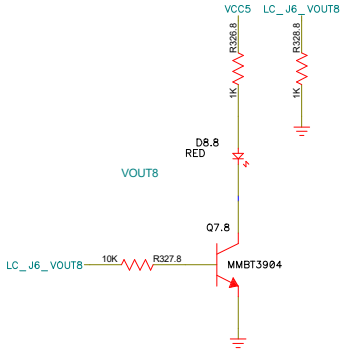

RED LED
Visible in the center between the CORE supplies

DUT POWER

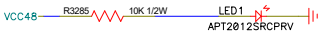

Title: Aurora PGA Sonoma Air full size BIM		
Size: C	Number: SCH#S0034	Rev: A
Date: 07/13/24	Drawn by	
Filename	Sheet 11 of 14	

LCSP_LED_POWER(J7)

VOUT1

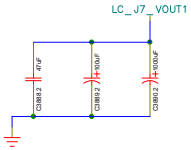

VOUT2

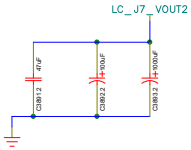

VOUT3

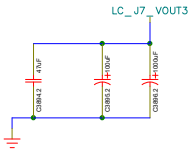

VOUT4

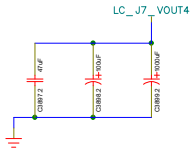

VOUT5

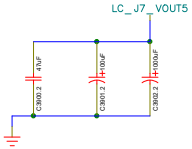

VOUT6

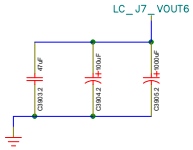

VOUT7

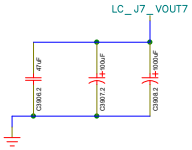

VOUT8

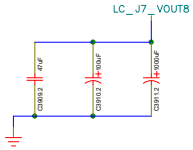

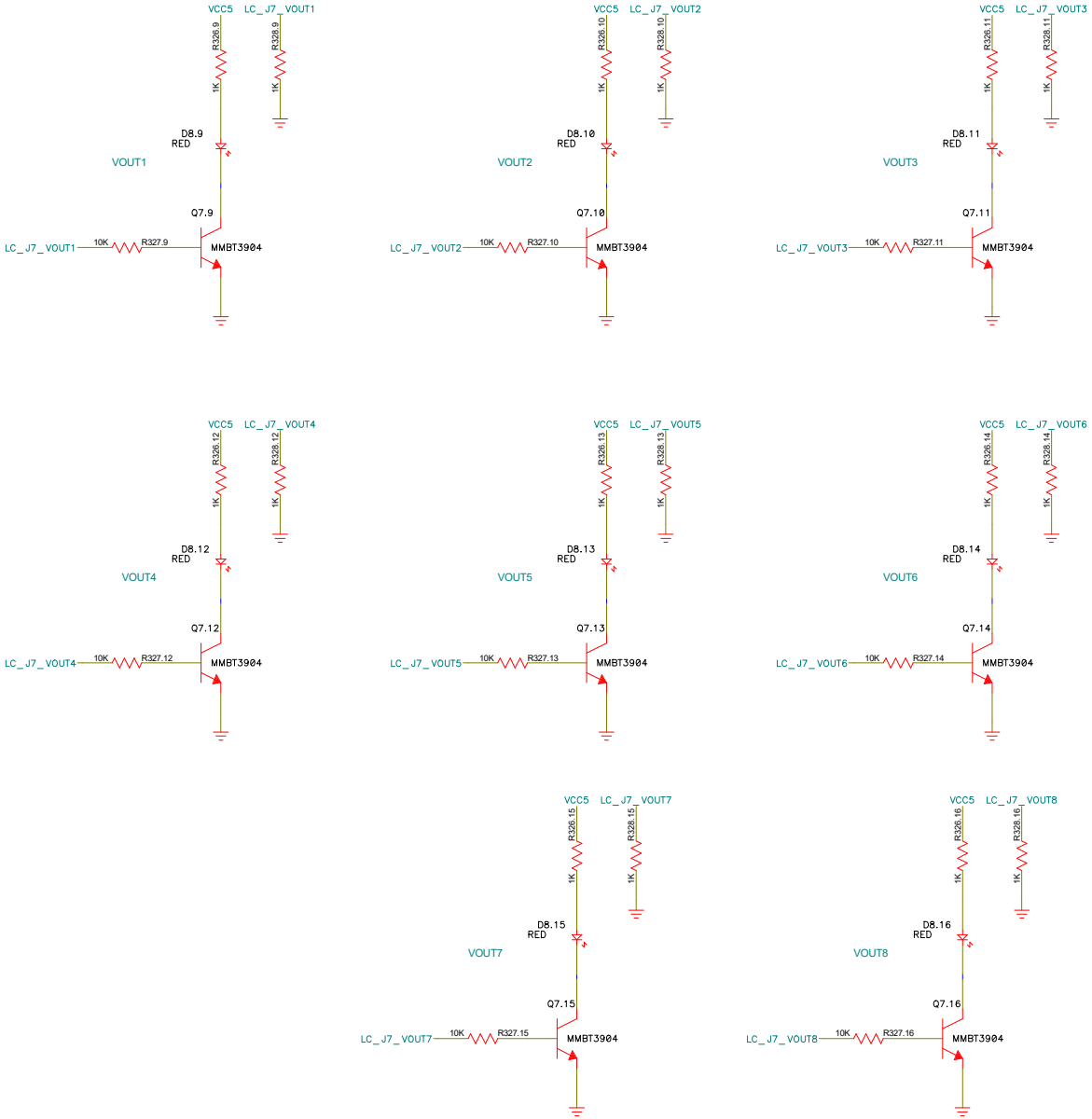

Title: Aurora PGA Sonoma Air full size BIM		
Size: C	Number: SCH#S0034	Rev: A
Date: 07/13/24	Drawn by	
Filename	Sheet 12 of 14	

HEATER CIRCUIT

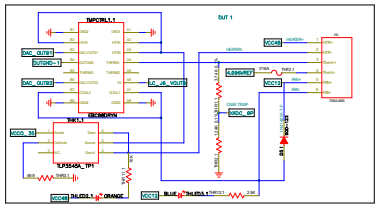

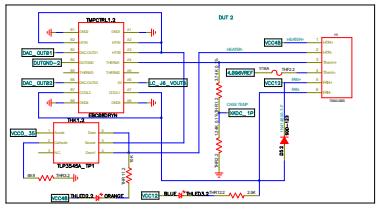

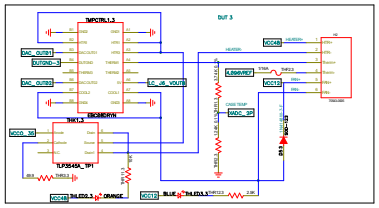

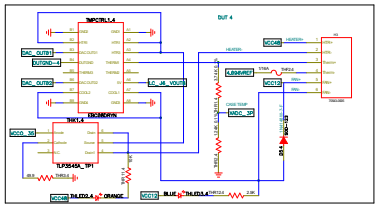

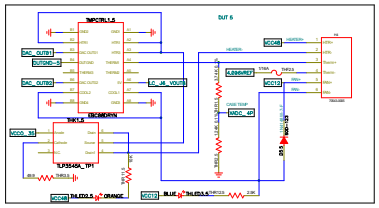

HCPS POWERS

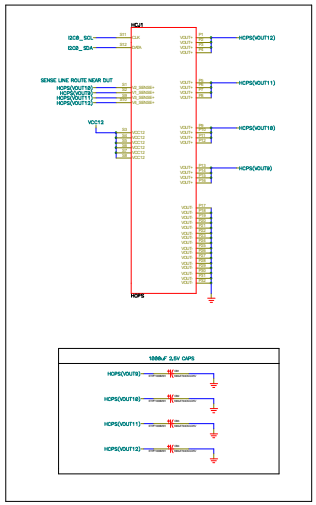

LED FOR HCPS SUPPLIES

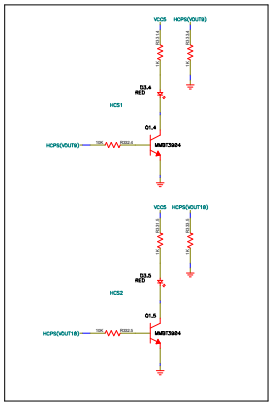

Title: Aurora PGA Sonoma Air full size BIM		
Size: E	Number: SCH#S0034	Rev: A
Date: 07/13/24	Drawn by:	
Filename:	Sheet: 13 of 14	

J3,J4,J5 Controller Functions

J3

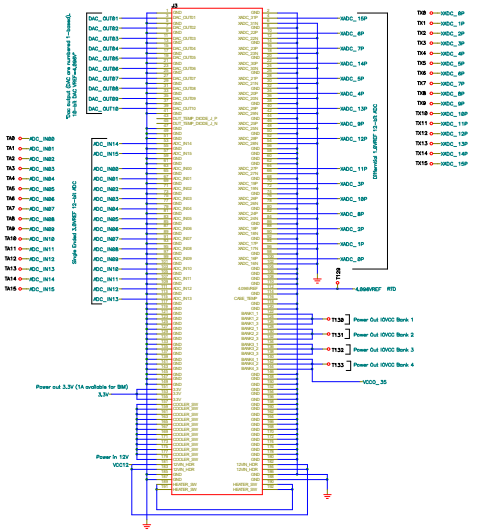

J4

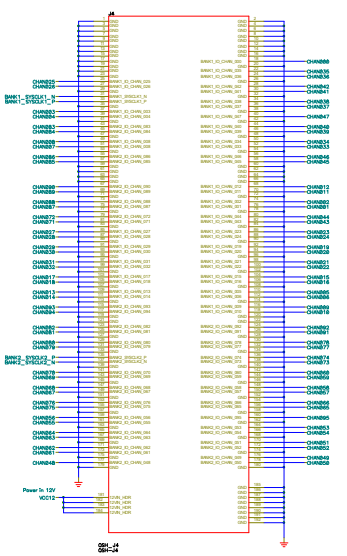

J5

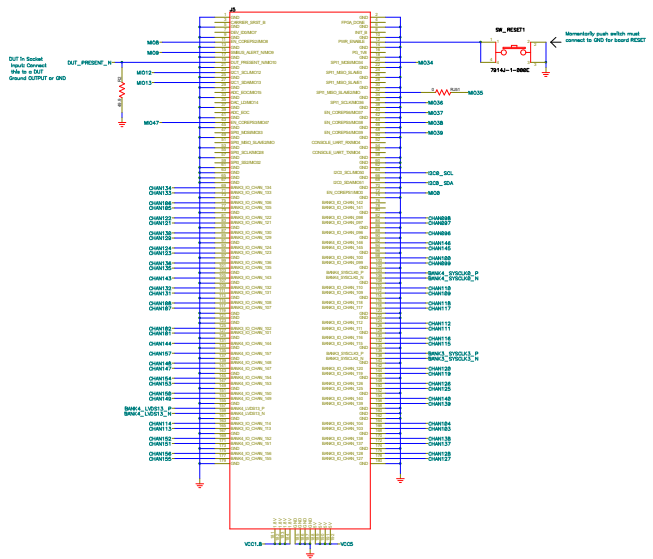

TESTER CHANNEL TEST POINTS

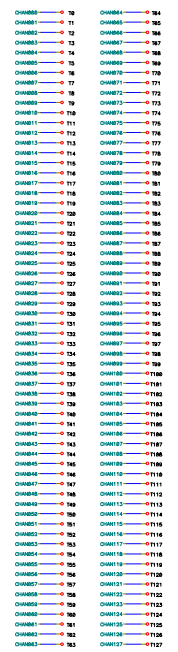

Title	Aurora PGA Sonoma Air full size BIM	
Size E	Number SCH#S0034	Rev A
Date 07/13/24	Drawn by	
Filename	Sheet 14 of 14	